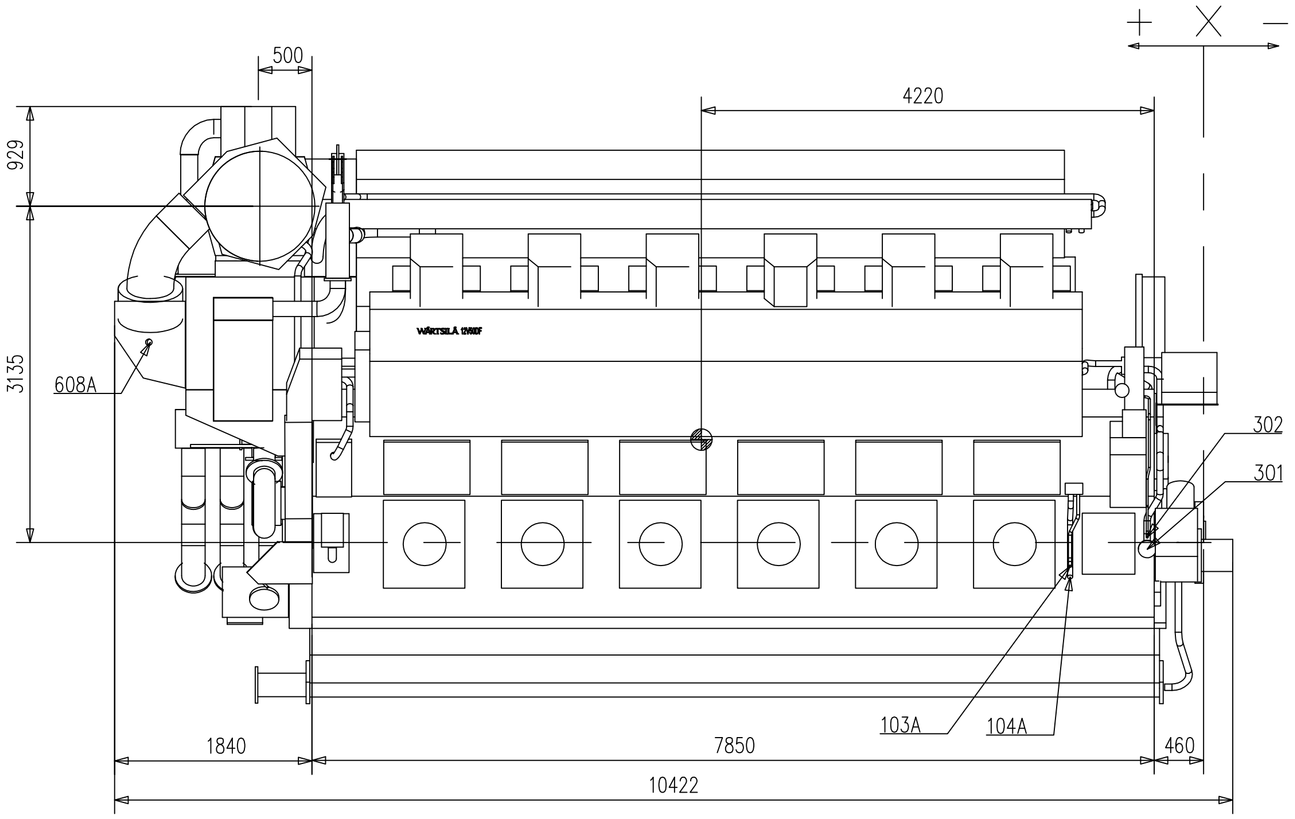

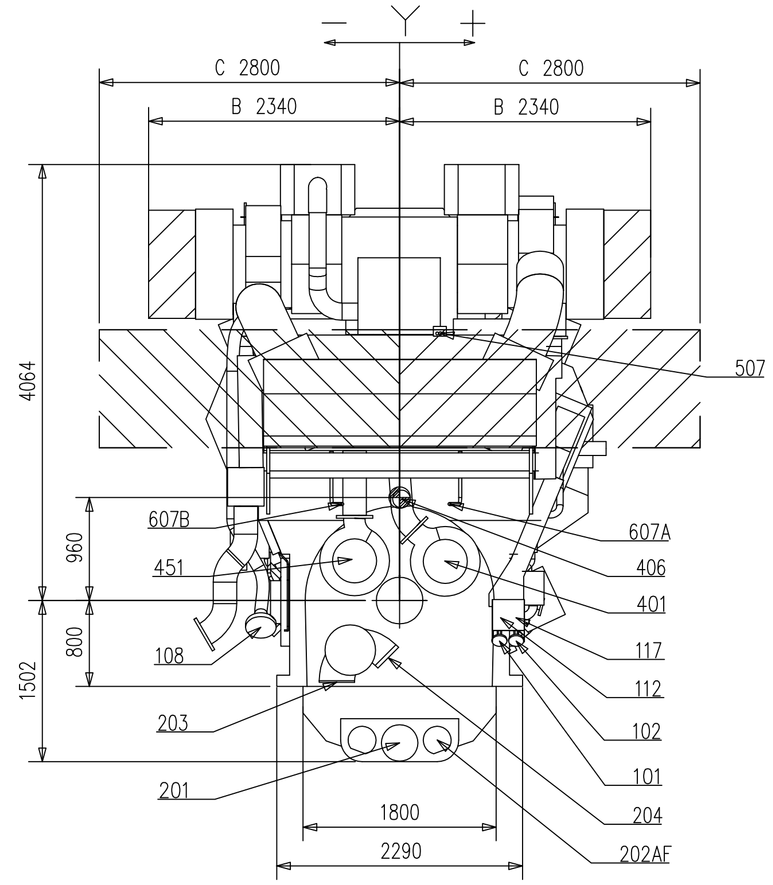

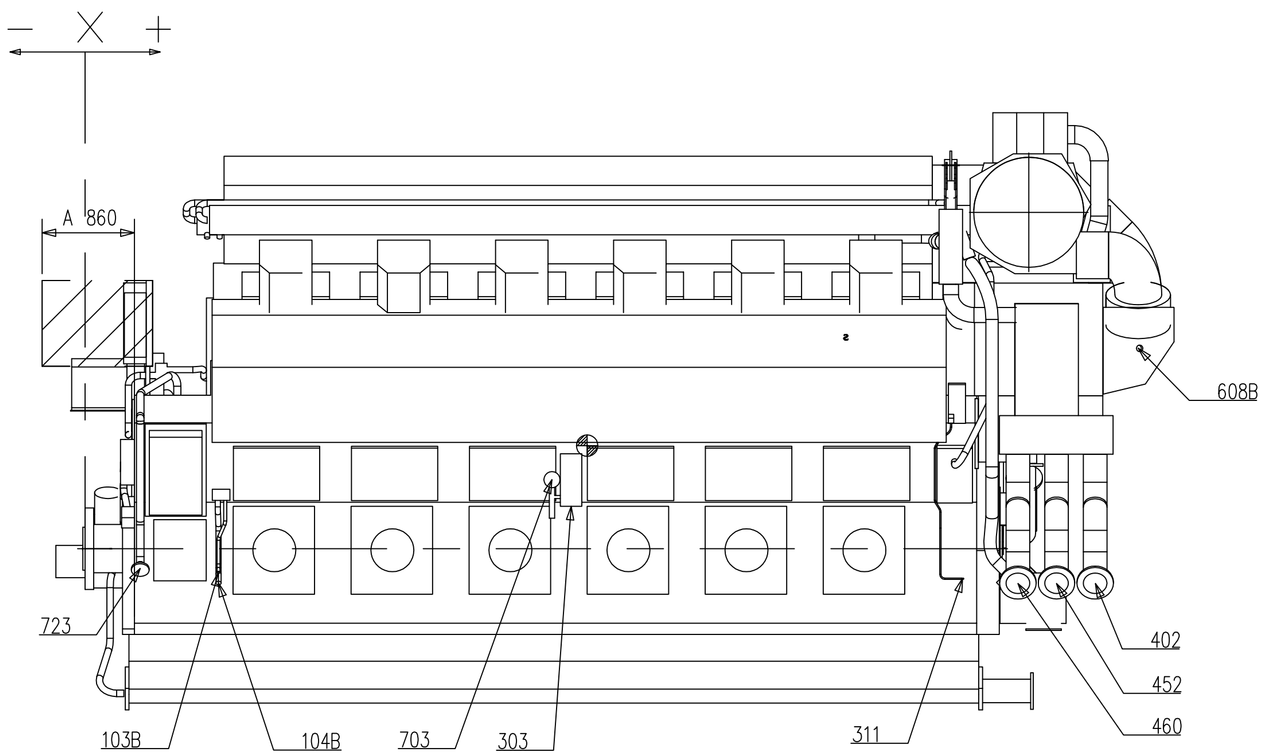

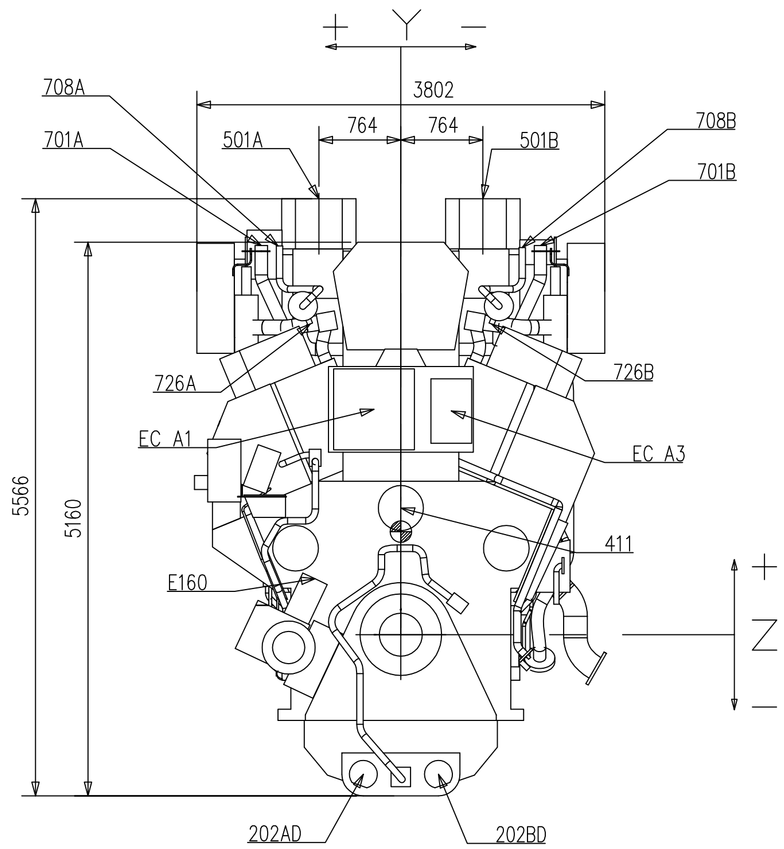

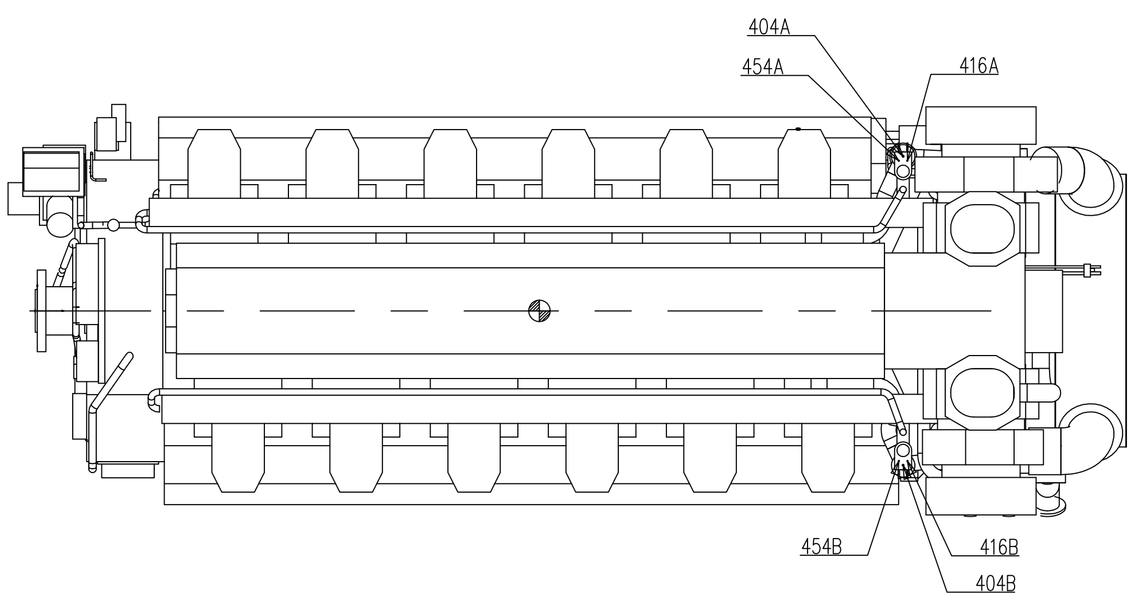

CENTER OF GRAVITY

Painot: /WEIGHTS (TOL. ±2.5%)
DIESEL ENGINE (DRY WEIGHT) W12V50DF : 176000 Kg

Code	Explantion
101	MAIN FUEL OIL INLET
102	MAIN FUEL OIL OUTLET
103A	CLEAN FUEL OIL LEAKAGE, A-BANK
103B	CLEAN FUEL OIL LEAKAGE, B-BANK
104A	DIRTY FUEL OIL LEAKAGE, A-BANK
104B	DIRTY FUEL OIL LEAKAGE, B-BANK
108	GAS INLET
112	PILOT FUEL OIL INLET
117	PILOT FUEL OIL OUTLET
201	LUBE OIL INLET
202AD	LUBE OIL OUTLET (FROM OIL SUMP), A-SIDE, D,E
202AF	LUBE OIL OUTLET (FROM OIL SUMP), A-SIDE, F,E
202BD	LUBE OIL OUTLET (FROM OIL SUMP), B-SIDE, D,E
203	LUBE OIL TO ENGINE DRIVEN PUMP
204	LUBE OIL FROM ENGINE DRIVEN PUMP
301	STARTING AIR INLET, 30 bar
302	CONTROL AIR INLET, 30 bar
303	DRIVING AIR TO OIL MIST DETECTOR
311	CONTROL AIR TO WG AND GAS VENT VALVE
401	HT-WATER INLET
402	HT-WATER OUTLET
404A	HT-WATER AIR VENT, A-BANK
404B	HT-WATER AIR VENT, B-BANK
406	WATER FROM PREHEATER TO HT-CIRCUIT
411	HT-WATER DRAIN
416A	HT-WATER AIR VENT FROM C.A.C. , A-BANK
416B	HT-WATER AIR VENT FROM C.A.C. , B-BANK
451	LT-WATER INLET
452	LT-WATER OUTLET
454A	LT-WATER AIR VENT FROM C.A.C. , A-BANK
454B	LT-WATER AIR VENT FROM C.A.C. , B-BANK
460	LT-WATER TO ALTERNATOR
501A	EXHAUST GAS OUTLET , A-BANK
501B	EXHAUST GAS OUTLET , B-BANK
507	CLEANING WATER TO TURBOCHARGERS
607A	CONDENSATE WATER FROM C.A.C.,A-BANK
607B	CONDENSATE WATER FROM C.A.C.,B-BANK
608A	CLEANING WATER TO C.A.C., A-BANK
608B	CLEANING WATER TO C.A.C., B-BANK
701A	CRANKCASE AIR VENT, A-BANK
701B	CRANKCASE AIR VENT, B-BANK
703	OUTLET FROM OIL MIST DETECTOR
708A	GAS SYSTEM VENT, A-BANK
708B	GAS SYSTEM VENT, B-BANK
723	INERT GAS TO CRANKCASE
726A	AIR INLET TO DOUBLE WALL GAS SYSTEM, A-BANK
726B	AIR INLET TO DOUBLE WALL GAS SYSTEM, B-BANK
EC A1	ELECTRICAL CONNECTION MAIN MODULE
EC A3	ELECTRICAL CONNECTION POWER MODULE
E160	ELECTRIC MOTOR FOR TURNING GEAR

A. Space for opening the cover of communication module
B. Space for dismantling turbocharger
C. Space for dismantling air cooler

WÄRTSILÄ

© Wärtsilä Finland Oy Ship Power

W12V50DF ENGINE OUTLINE AND SERVICE SPACE

T/C AT FREE END

DRY SUMP

Product	W12V50DF	UNITS	mm kg
MADE	26.04.2007	W-SP	DESIGN GROUP
CHKD			
APPD			

MAT. NO. – PART CLASS. – –

SCALE 1: 40 SIZE A1 PAGE NO. 1/1 DRG. NO. DAAE047513 Rev.

CONFIDENTIAL

This drawing is the property of Wärtsilä Finland Oy and shall not be copied, shown or communicated to a third party without the consent of the owner.