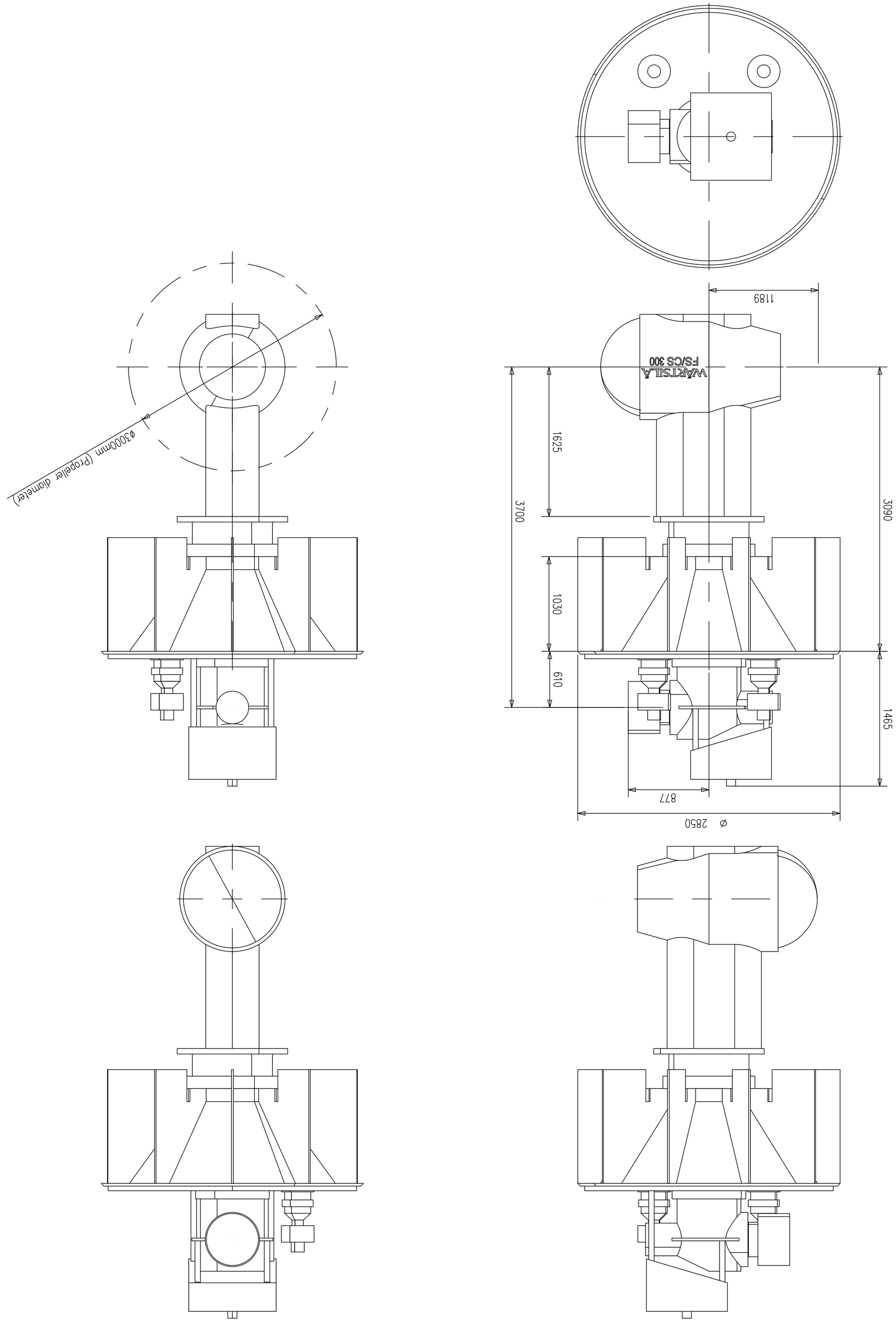

Design/Draw: M-SP	Scale: 1:25	Material: –	
Check: –		Standard: –	
Appr.:		Mass dwg.: –	Weight kg.: –
			Title: FS/CS 300 THRUSTER OUTLINE WITH CLUTCH PROPELLER DIAMETER 3000 mm
			Dwg. no.: DAAK006615
			Size: A1 Page no.: 1/1

WÄRTSILÄ

This drawing is the property of Wärtsilä Propulsion Norway AS, and shall neither be copied, shown nor communicated to a third party without approval of the owner.