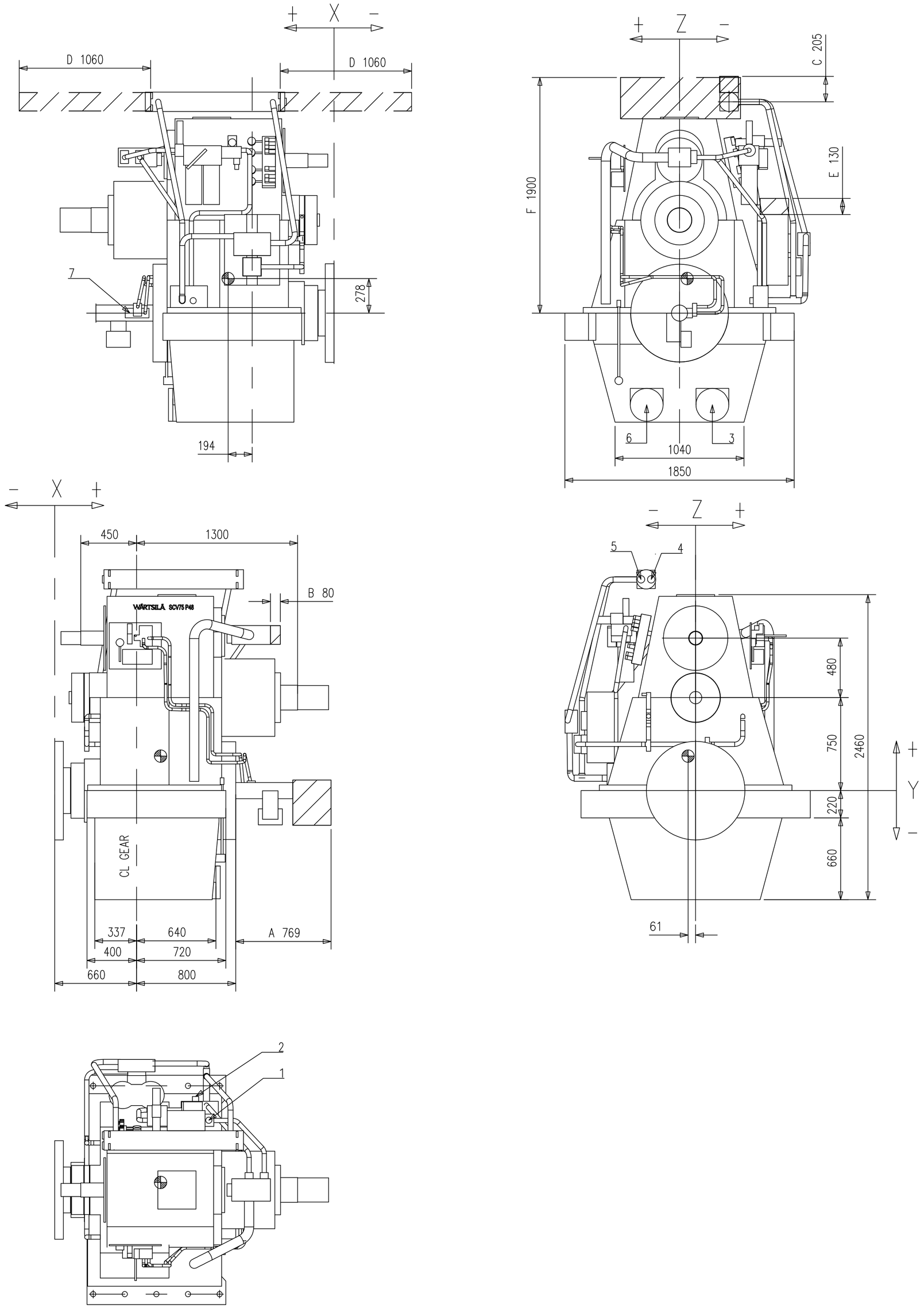

CENTER OF GRAVITY

DRY WEIGHT – APPX. 10000 kg

Pos.	Description
7	To header tank
6	Drain from header tank
5	Cooling water out
4	Cooling water in
3	Suction stand by oil pump
2	From stand-by oil pump, low pressure
1	From stand-by oil pump, high pressure

A. Service space for OD box
B. Service space for Gear pump
C. Service space for cooler anode exhange
D. Service space for cooler
E. Service space for LP filter
F. Service space for Gear housing top

Design/Draw: Propulsion	Scale: 1:20	Material: –	
Check: –		Standard: –	
Appr.: –		Model dwg.:	Weight Kg.: –
WÄRTSILÄ		Title.: SCV75-P48 GEARBOX OUTLINE AND SERVICE SPACE	
		Dwg. no.: DAAL000618	Rev.:
		Klassekode:	Size: A1 / Page no.: 1/1 / Spare part group.: –

This drawing is the property of Wärtsilä Propulsion Norway AS, and shall neither be copied, shown nor communicated to a third party without approval of the owner.